FTHC01 temperature humidity controller manual

Thank you for purchasing our products. Please read this manual carefully before using it, and keep it properly for future reference.

■ Features:

① The controller using the latest digital temperature and humidity measurement technology, with the advantage of high precision, stable and reliable, easy to install, low power consumption.

② Real-time temperature and humidity display, overrun alarm, control function.

③ 4 working modes can be selected: 1 heating dehumidification; 2 heating humidification; 3 refrigeration dehumidification; 4 refrigeration humidification.

■ Performance parameters:

① Input voltage: 110VAC-250VAC.

② Temperature and humidity display accuracy: 0.1℃; temperature setting accuracy: 0.1℃; humidity setting accuracy: 0.1%RH; SHT10 temperature error: ±0.5℃; humidity accuracy: ±4.5%RH.

③ Humidity display range: 0-99.9%RH.

④ Temperature display range: -40 ℃ -125 ℃.

⑤ Temperature alarm Humidity alarm: Buzzer for default can connect an external 220V large decibel buzzer.

⑥ Output: 30A relay, its life is more than 10 million times.

■ Operating instructions:

① Install the controller in a dry, no direct sunlight, no rain location.

② Connect the power cord correctly according to the wiring diagram.

③ Turn on the power, display 8888, after 9 seconds, display current temperature

④ Press the (SET) key to enter the setting state, then you can press ▽ or △ key to adjust the settings SET1 to SET7, SET1 to SET7 will be cycled:

-TE- represents the temperature control menu; -HU- represents the humidity control menu; -C- represents the temperature alarm menu; -H- represents the humidity alarm menu;

-AU- represents the automatic manual menu; d-1 - represents sensor selection menu; Hour represents delay menu;

Press (SET) again, enter the appropriate set state;

-TE-: TE-H represents the temperature start value, TE-L represents the temperature stop value. TE-G represents the temperature error correction;

-HU-: HU-H represents the humidity start value. HU-L represents the humidity stop value. HU-G represents the humidity error correction;

-C-: -C-H represents the upper limit alarm temperature, -G-L represents the lower limit alarm temperature, press (ENT) key to switch

-H-: -U-H represents the upper limit alarm humidity, -U-L represents the lower limit alarm humidity, press (ENT) key to switch

When d-1- is blinking, press (SET) to enter sensor selection setting, press ▽ or △ to adjust， d-1-

represents to use SH10, SHT11, SHT15 sensors.

When Hou1 is blinking, press the (SET) key to enter the start-up delay setting, press ▽ or △ to adjust the address, the range is 0-9999 (unit: seconds), when it is 0, the delay not work.

When Hou2 is blinking, press (SET) to enter the cooling start delay setting, press ▽ to decrease or △ to adjust the address, adjust the range 0-9999 (unit seconds). Tune into 0 does not work

After setting, press (ENT) to exit

⑤ If the controller is alarm state, press (ENT) less than 5 seconds to release the alarm, if it is always overrun, will not alarm, the indicator flash, only the temperature and humidity enter the normal range, overrun again, then will alarm again.

⑥ Press down the (ENT) key more than 5 seconds. turn off the power supply then turn on the power, will restore to the factory setting.

■ Note:
① Do not place the device in an environment where the power supply is seriously disturbed.
② Check the power supply voltage is appropriate when turning on the power.
③ Do not place the device in high temperature, high humidity, rain and other environments
④ Should always check the alarm running, if it appear bad situation, should be promptly repaired.
⑤ The host's warranty is one-year (except man-made damage, such as the wrong line burned, soaked etc, it provide paid maintenance).

■ Connection:
Wiring Note: the output is switch type output, not 220 power output, you need to connect it by the the wiring diagram:

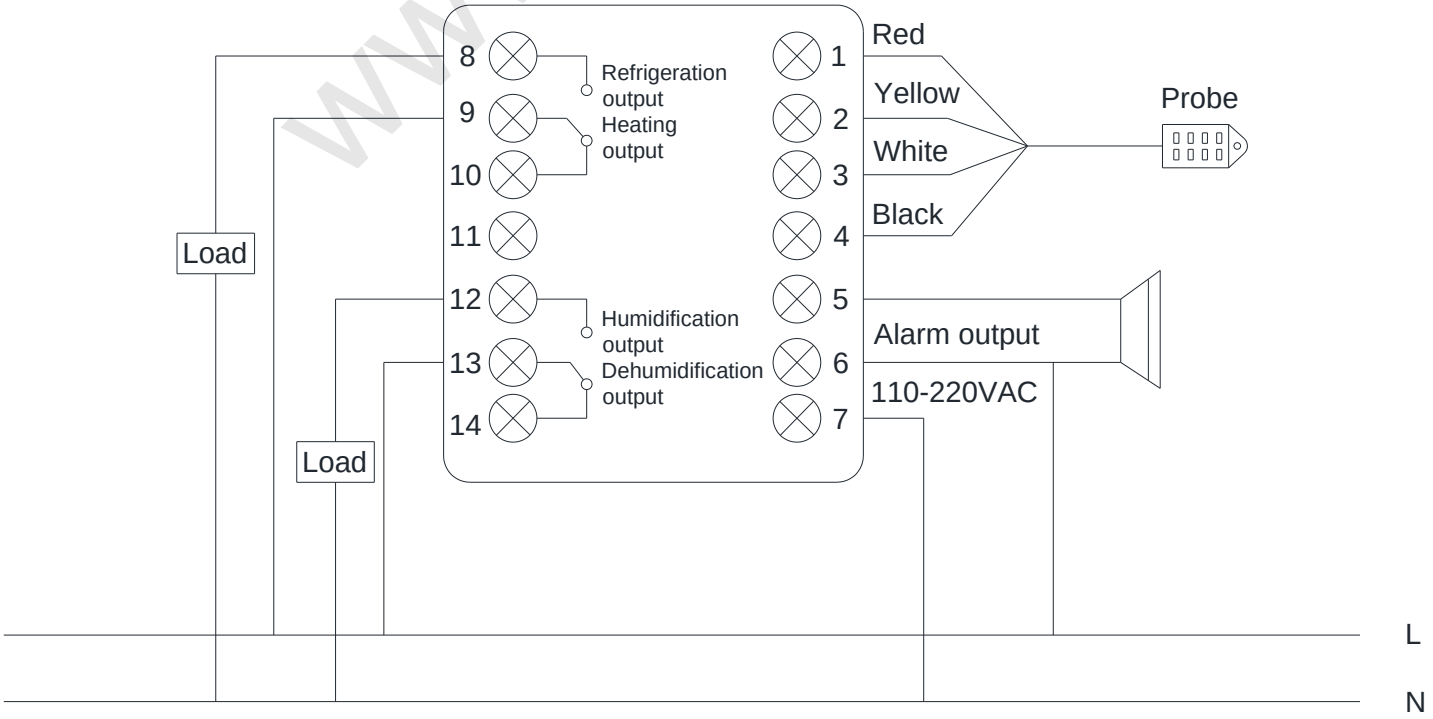

■ Setting example:

No need to set the hysteresis mode, automatic cooling or heating, dehumidification or humidification:

Example:

① Set the start temperature to 50.5 degrees, stop temperature to 40.5 degrees, the controller will automatically performs the cooling mode, when the temperature is higher than 50.5, will switch on the relay, lower than 40.5 will switch off the relay (it is mean that TE-H temperature start value is greater than TE-L temperature stop Value, it is cooling mode)

② Set the start temperature to 40.3 degrees, stop temperature to 50.3 degrees, the controller will automatically execute the heating mode, when the temperature is lower than 40.3, will switch on the, higher than 50.3 will switch off the relay (it is mean that TE-H temperature start value is smaller than TE-L temperature stop Value, it is heating mode)

③ Set the start humidity to 80.8 degrees, stop humidity to 60.8 degrees, the controller will be automatically dehumidification mode, when humidity is higher than 80.8, will switch on the relay, lower than 60.8, will switch off the relay (it is mean that HU-H humidity start value is greater than HU-L humidity stop Value, it is dehumidification model)

④ Set the start humidity to 60.8 degrees, stop humidity to 80.8 degrees, the controller will automatically perform humidification mode, humidity is lower than 60.8, will switch on the relay, higher than 80.8, will switch off the relay (it is mean that HU-H humidity start value is lowers than HU-L humidity stop value, it is humidification mode)